Forankra
Zabezpieczamy wszystko w transporcie™

Pulley Man KIT

Product information

The Pulley Man winch can be installed in three ways, rotates 360 degrees and has an infinite cable.

- Light weight and portable
- Suitable to lift loads up to 600 kg (PM600)
- Suitable to pull loads up to 3000 kg
- Can be used with a cordless drill and power drill
- Possible to rotate the load 360°
- Standard rope length 12 meters
- Patented self-braking reduction brake
- 1 layer of paint

KIT including:

- Pulley Man PM300 or PM600
- Robust case with foam L: 457 W: 367 H: 183 - Brand: Explorercase
- Cordless drill 18V - 50 Nm - Brand: Hikoki
- 2 Li-ion batteries 18V - 2,5 Ah - Brand: Hikoki
- 1 charger - Brand: Hikoki
- 1 steel wire rope sling standard length 12 mtr
- 2 shackles type G-210 - Brand: Crosby
- 1 sling, length 1 m

Marking: CE-marked

WLL ton	Lifting height m	Lifting speed m/min	Number of falls	Bec kg	Delivery time
0,3	12	6	1	9,5	12
0,6	12	3	2	10	12
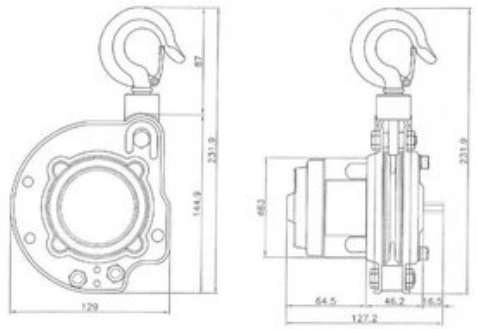
Blueprint